FCC Part 15B Test Report

Report No.	:	TB-FCC170091
Applicant	:	Shanghai Imaging Security Technologies Co., Ltd.
Equipment Under Test (EUT)		
EUT Name	:	Walkthrough Metal Detector
Model No.	:	EI-MD3000
Series Model No.	:	EI-V1000, EI-V2000, EI-V3000, EI-V4000, EI-MD2000A, EI-MD3000A, EI-MD3000B, EI-MD3000C, EI-MD3000D.
Brand Name	:	----
Receipt Date	:	2019-11-01
Test Date	:	2019-11-01 to 2019-11-04
Issue Date	:	2019-11-04
Standards	:	FCC 47 CFR Part 15 Subpart B
Conclusions	:	**PASS**

In the configuration tested, the EUT complied with the standards specified above

The EUT technically complies with the FCC requirements

Test/Witness Engineer	:	Rebeca
Engineer Supervisor	:	IVAN SU
Engineer Manager	:	Ray Lai

Rebeca

Ray Lai

This report details the results of the testing carried out on one sample. The results contained in this test report do not relate to other samples of the same product. The manufacturer should ensure that all products in series production are in conformity with the product sample detailed in the report.

1A/F., Bldg.6, Yusheng Industrial Zone, The National Road No.107 Xixiang Section 467, Xixiang, Bao'an, Shenzhen, China
Tel: +86 75526509301 Fax: +86 75526509195

Contents

CONTENTS 2
1. GENERAL INFORMATION 4
1.1 Client Information 4
1.2 General Description of EUT (Equipment Under Test) 4
1.3 Block Diagram Showing The Configuration of System Tested 5
1.4 Description of Support Units 5
1.5 Description of Test Mode 5
1.6 Test standards 5
1.7 Test Facility 6
1.8 Measurement Uncertainty 6
2. TEST SUMMARY 7
3. TEST EQUIPMENT USED 7
4. LABEL REQUIREMENTS & STATEMENT REQUIREMENTS 8
5. CONDUCTED EMISSION TEST 9
5.1 Test Standard and Limit 9
5.2 Test Setup 9
5.3 Test Procedure 10
5.4 Test Data 10
6. RADIATED EMISSION TEST 11
6.1 Test Standard and Limit 11
6.2 Test Setup 12
6.3 Test Procedure 13
6.4 Test Data 13
7. PHOTOGRAPHS - CONSTRUCTIONAL DETAILS 14
ATTACHMENT A--CONDUCTED EMISSION TEST DATA 16
ATTACHMENT B--RADIATED EMISSION TEST DATA 18

Revision History

Report No.	Version	Description	Issued Date
TB-FCC154983	Rev.01	Initial issue of report	2017-07-21
TB-FCC170091	Rev.02	Increase the model	2019-11-04

1. General Information

1.1 Client Information

Applicant	:	Shanghai Imaging Security Technologies Co., Ltd.
Address	:	No.111, Zhiye Road, Pudong New District, Shanghai, P. R. China
Manufacturer	:	Shanghai Imaging Security Technologies Co., Ltd.
Address	:	No.111, Zhiye Road, Pudong New District, Shanghai, P. R. China

1.2 General Description of EUT (Equipment Under Test)

EUT Name	:	Walkthrough Metal Detector
Model(s)	:	EI-MD3000, EI-V1000, EI-V2000, EI-V3000, EI-V4000, EI-MD2000A, EI-MD3000A, EI-MD3000B, EI-MD3000C, EI-MD3000D.
Model Difference	:	All above models are identical in schematic, structure, critical components and input/output voltage except for output power, therefore, FCC testing was performed with EI-MD3000 only.
Brand Name	:	-----
Power Supply	:	120V, 60Hz, 15W
Equipment	:	☐ Class A ☒ Class B
Class A Equipment: the Equipment is not intended primarily for use in a residential environment. **Class B Equipment:** the Equipment is intended primarily for use in a residential environment.		

1.3 Block Diagram Showing The Configuration of System Tested

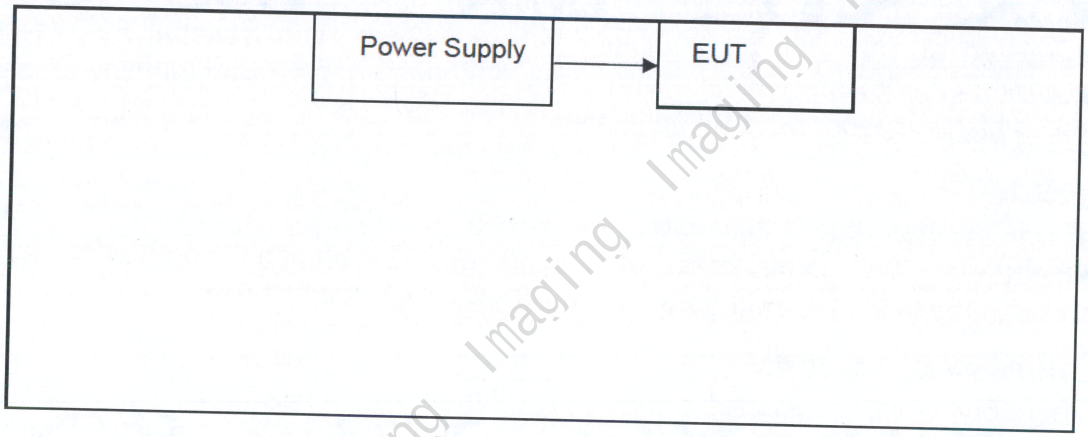

1.4 Description of Support Units

The EUT has been tested as an independent unit.

1.5 Description of Test Mode

To investigate the maximum EMI emission characteristics generates from EUT, the test system was pre-scanning tested base on the consideration of following EUT operation mode or test configuration mode which possible have effect on EMI emission level. Each of these EUT operation mode(s) or test configuration mode(s) mentioned follow was evaluated respectively.

For Conducted Test	
Final Test Mode	**Description**
Mode 1	Normal Mode
For Radiated Test	
Final Test Mode	**Description**
Mode 1	Normal Mode

1.6 Test standards

The objective is to determine compliance with FCC Part 15, Subpart B, and section 15.107, 15.109 rules.
Maintenance of compliance is the responsibility of the manufacturer. Any modification of the product, which result in lowering the emission, should be checked to ensure compliance has been maintained.

1.7 Test Facility

The testing report were performed by the Shenzhen Toby Technology Co., Ltd., in their facilities located at 1A/F., Bldg.6, Yusheng Industrial Zone, The National Road No.107 Xixiang Section 467, Xixiang, Bao'an, Shenzhen, Guangdong, China. At the time of testing, the following bodies accredited the Laboratory:

CNAS (L5813)
The Laboratory has been accredited by CNAS to ISO/IEC 17025: 2005 General Requirements for the Competence of Testing and Calibration Laboratories for the competence in the field of testing. And the Registration No.: CNAS L5813.

A2LA Certificate No.: 4750.01
The laboratory has been accredited by American Association for Laboratory Accreditation(A2LA) to ISO/IEC 17025：2005 General Requirements for the Competence of Testing and Calibration Laboratories for the technical competence in the field of Electrical Testing. And the A2LA Certificate No.: 4750.01.

IC Registration No.: (11950A-1)
The Laboratory has been registered by Certification and Engineering Bureau of Industry Canada for radio equipment testing. The site registration: Site# 11950A-1.

1.8 Measurement Uncertainty

The reported uncertainty of measurement y ± U，where expended uncertainty U is based on a standard uncertainty multiplied by a coverage factor of k=2，providing a level of confidence of approximately 95 %.

Test	Parameters	Expanded Uncertainty (U_{Lab})	Expanded Uncertainty (U_{Cispr})
Conducted Emission	Level Accuracy: 9kHz~150kHz 150kHz to 30MHz	±3.42 dB ±3.42 dB	±4.0 dB ±3.6 dB
Radiated Emission	Level Accuracy: Above 1000MHz	±4.20 dB	N/A
Radiated Emission	Level Accuracy: 30MHz to 1000 MHz	±4.40 dB	±5.2 dB

2. Test Summary

Test Items	Test Requirement	Test Method	Result
Conducted Emission	FCC 47 CFR Part 15 Section 15.107	ANSI C63.4	Pass
Radiated Emission	FCC 47 CFR Part 15 Section 15.109	ANSI C63.4	Pass
Note: N/A is an abbreviation for Not Applicable.			

3. Test Equipment Used

Conducted Emission Test

Equipment	Manufacturer	Model No.	Serial No.	Last Cal.	Cal. Due Date
EMI Test Receiver	Rohde & Schwarz	ESCI	100321	Jul. 13, 2019	Jul. 12, 2020
RF Switching Unit	Compliance Direction Systems Inc	RSU-A4	34403	Jul. 13, 2019	Jul. 12, 2020
AMN	SCHWARZBECK	NNBL 8226-2	8226-2/164	Jul. 13, 2019	Jul. 12, 2020
LISN	Rohde & Schwarz	ENV216	101131	Jul. 13, 2019	Jul. 12, 2020

Radiation Emission Test

Equipment	Manufacturer	Model No.	Serial No.	Last Cal.	Cal. Due Date
Spectrum Analyzer	Agilent	E4407B	MY45106456	Jul. 13, 2019	Jul. 12, 2020
EMI Test Receiver	Rohde & Schwarz	ESCI	101165	Jul. 13, 2019	Jul. 12, 2020
Bilog Antenna	ETS-LINDGREN	3142E	00117537	Jan. 27, 2019	Jan. 26, 2020
Bilog Antenna	ETS-LINDGREN	3142E	00117542	Jan. 27, 2019	Jan. 26, 2020
Horn Antenna	ETS-LINDGREN	3117	00143207	Mar. 03, 2019	Mar. 02, 2020
Horn Antenna	ETS-LINDGREN	3117	00143209	Mar. 03, 2019	Mar. 02, 2020
Pre-amplifier	HP	11909A	185903	Mar. 04, 2019	Mar. 03, 2020
Pre-amplifier	HP	8449B	3008A00849	Mar. 04, 2019	Mar. 03, 2020
Cable	HUBER+SUHNER	100	SUCOFLEX	Mar. 04, 2019	Mar. 03, 2020
Signal Generator	Rohde & Schwarz	SML03	IKW682-054	Mar. 04, 2019	Mar. 03, 2020
Positioning Controller	ETS-LINDGREN	2090	N/A	N/A	N/A

4. Label Requirements & Statement Requirements

☒ **Class B**

Label Requirements

Class B digital device subject to certification by the FCC shall carry a warning label which includes the following statement:

*****WARNING*****

This device complies with Part 15 of the FCC Rules. Operation is subject to the following two conditions: (1) this device may not cause harmful interference, and (2) this device must accept any interference received, including interference that may cause undesired operation.

☐ **Class A**

Statement Requirements

The operator's manual for a Class A digital device shall contain the following statements or their equivalent:

*****WARNING*****

This equipment has been tested and found to comply with the limits for a Class A digital device, pursuant to part 15 of the FCC Rules. These limits are designed to provide reasonable protection against harmful interference when the equipment is operated in a commercial environment This equipment generates, uses, and can radiate radio frequency energy and, if not installed and uses in accordance with the instruction manual, may cause harmful interference to radio communications Operation of this equipment in a residential area is likely to cause harmful interference in which case the user will be required to correct the interference at his own expense.
Notice: The changes or modifications not expressly approved by the party responsible for compliance could void the user's authority to operate the equivalent.

****

If the EUT was tested with special shielded cables the operator's manual for such product shall also contain the following statements or their equivalent:
Shielded interface cables and/or AC power cord, if any, must be used in order to comply with the emission limits.

5. Conducted Emission Test

5.1 Test Standard and Limit

5.1.1 Test Standard

FCC Part 15.107

5.1.2. Test Limit

Conducted Emission Test Limit (Class A)

Frequency (MHz)	Maximum RF Line Voltage (dBμV)	
	Quasi-peak Level	Average Level
0.15~0.50	79	66
0.50~30	73	60

Conducted Emission Test Limit (Class B)

Frequency (MHz)	Maximum RF Line Voltage (dBμV)	
	Quasi-peak Level	Average Level
0.15~0.5	66 ~ 56 *	56 ~ 46 *
0.50~5	56	46
5~30	60	50
*decreasing linearly with logarithm of the frequency		

5.2 Test Setup

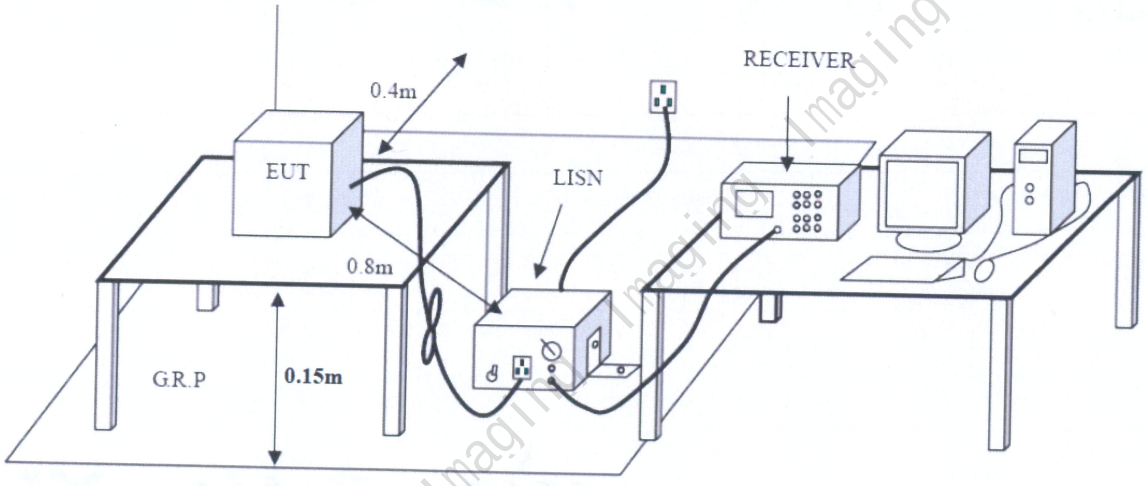

5.3 Test Procedure

The EUT was placed 0.15 meters from the horizontal ground plane with EUT being connected to the power mains through a line impedance stabilization network (LISN). All other support equipments powered from additional LISN(s). The LISN provide 50 Ohm/ 50uH of coupling impedance for the measuring instrument.

The cables shall be insulated (by up to 15 cm) from the horizontal ground reference plane, and shall be folded back and forth in the center forming a bundle 30 to 40 cm long.

I/O cables that are not connected to a peripheral shall be bundled in the center. The end of the cable may be terminated, if required, using the correct terminating impedance. The overall length shall not exceed 1 m.

LISN at least 80 cm from nearest part of EUT chassis.

The bandwidth of EMI test receiver is set at 9kHz, and the test frequency band is from 0.15MHz to 30MHz.

5.4 Test Data

Please refer to the Attachment A.

6. Radiated Emission Test

6.1 Test Standard and Limit

6.1.1 Test Standard

FCC Part 15.109

6.1.2 Test Limit

Radiated Emission Test Limit (Class A)	
Frequency MHz	**Field Strengths Limits dB(μV/m)**
30 ~ 88	49.0
88 ~ 216	53.5
216 ~ 960	56.4
Above 960	59.5
Radiated Emission Test Limit (Class B)	
Frequency MHz	**Field Strengths Limits dB(μV/m)**
30 ~ 88	40.0
88 ~ 216	43.5
216 ~ 960	46.0
Above 960	54.0

* The lower limit shall apply at the transition frequency.
* The test distance is 3m.

Frequency (MHz)	Class A Radiated Limit (dBμV/m)- Distance of 3 metres	
	Linear Average Detector	Peak Detector
>1000	59.5	79.5
Frequency (MHz)	**Class B Radiated Limit (dBμV/m)-Distance of 3 metres**	
	Linear Average Detector	Peak Detector
>1000	54	74

Note:

Highest Frequency Generated or Used in Device	Upper Frequency of Radiated Measurement
Below 1.705 MHz	No radiated testing required
1.705 MHz – 108 MHz	1 GHz
108 MHz – 500 MHz	2 GHz
500 MHz – 1 GHz	5 GHz
Above 1 GHz	5th harmonic of the highest frequency or 40 GHz, whichever is lower.

6.2 Test Setup

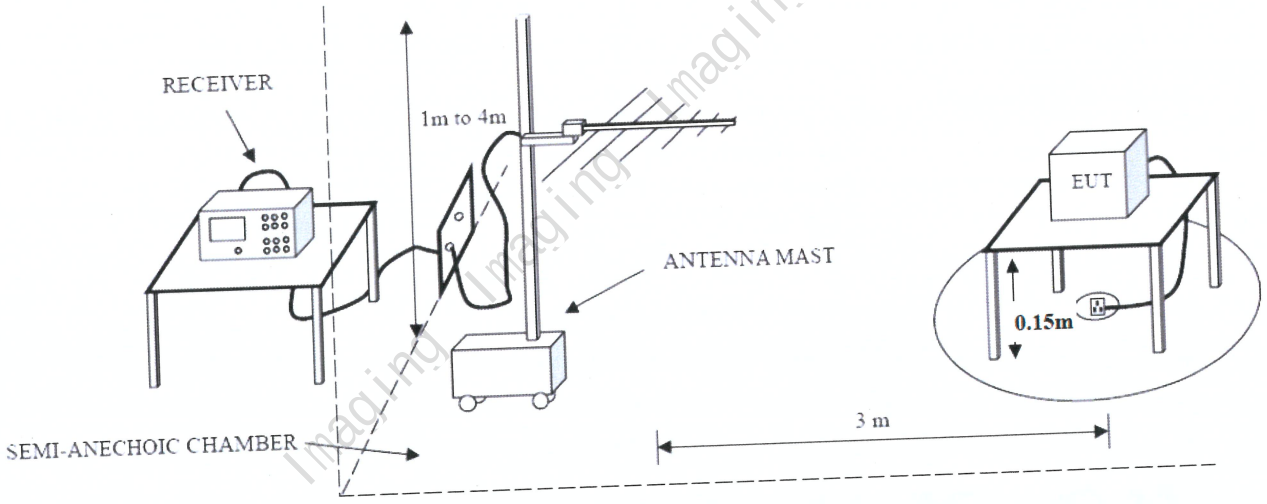

Below 1G

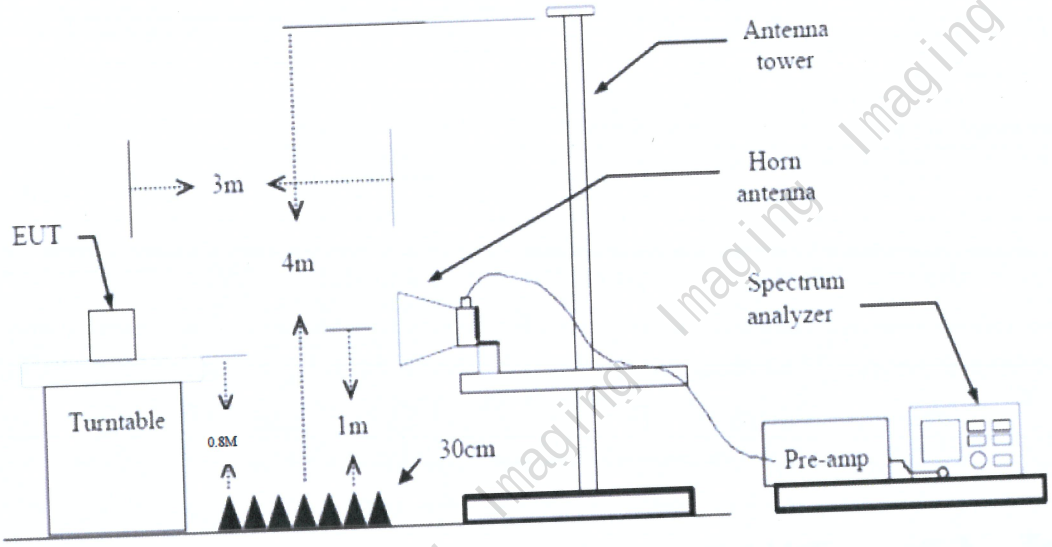

Above 1G

6.3 Test Procedure

The EUT was placed on the top of a rotating table which is 0.8 meters above the ground. EUT is set 3.0 meters away from the receiving antenna that mounted on a antenna tower. The table was rotated 360 degrees to determine the position of the highest radiation, the antenna can be moved up and down between 1.0 meter and 4 meters to find out the maximum emission level. Both horizontal and vertical polarizations of the antenna are set to make the measurement.

Measurements shall be made with a quasi-peak measuring receiver in the frequency range 30MHz to 1000MHz. If the Peak Mode measured value compliance with and lower than quasi-peak mode Limit, the EUT shall be deemed to meet QP Limits and then no additional QP Mode measurement performed. Measurements shall be made with a Peak and AVG measuring receiver in the frequency range Above 1000MHz.

6.4 Test Data

Please refer to the Attachment B.

7. Photographs - Constructional Details

Photo 1 Appearance of EUT

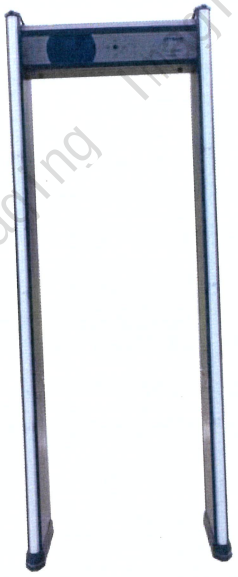

Photo 2 Internal of EUT



Photo 3 Internal of EUT



Attachment A--Conducted Emission Test Data

Temperature:	25 ℃	**Relative Humidity:**	55%
Test Voltage:	AC 120V/60Hz		
Terminal:	Line		
Test Mode:	Mode 1		
Remark:			

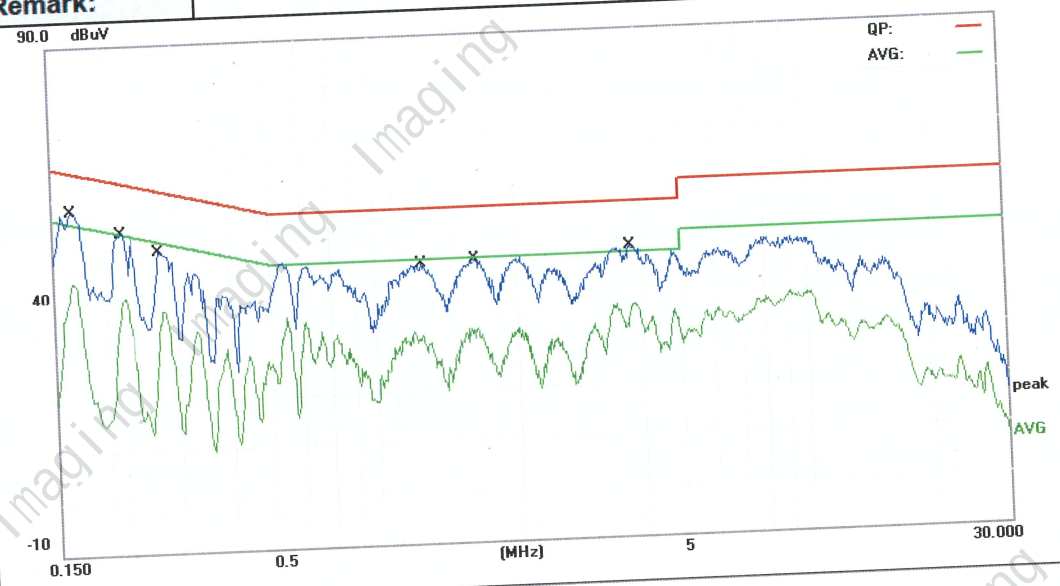

No.	Mk.	Freq.	Reading Level	Correct Factor	Measure-ment	Limit	Over	
		MHz	dBuV	dB	dBuV	dBuV	dB	Detector
1	*	0.1660	44.48	10.12	54.60	65.15	-10.55	QP
2		0.1660	33.22	10.12	43.34	55.15	-11.81	AVG
3		0.2180	39.58	10.11	49.69	62.89	-13.20	QP
4		0.2180	28.91	10.11	39.02	52.89	-13.87	AVG
5		0.2700	34.93	10.10	45.03	61.12	-16.09	QP
6		0.2700	24.54	10.10	34.64	51.12	-16.48	AVG
7		1.1700	30.64	10.14	40.78	56.00	-15.22	QP
8		1.1700	19.87	10.14	30.01	46.00	-15.99	AVG
9		1.5859	31.59	10.10	41.69	56.00	-14.31	QP
10		1.5859	19.85	10.10	29.95	46.00	-16.05	AVG
11		3.7580	32.18	10.06	42.24	56.00	-13.76	QP
12		3.7580	23.07	10.06	33.13	46.00	-12.87	AVG

Emission Level= Read Level+ Correct Factor

Temperature:	25 ℃	**Relative Humidity:**	55%
Test Voltage:	AC 120V/60Hz		
Terminal:	Neutral		
Test Mode:	Mode 1		
Remark:			

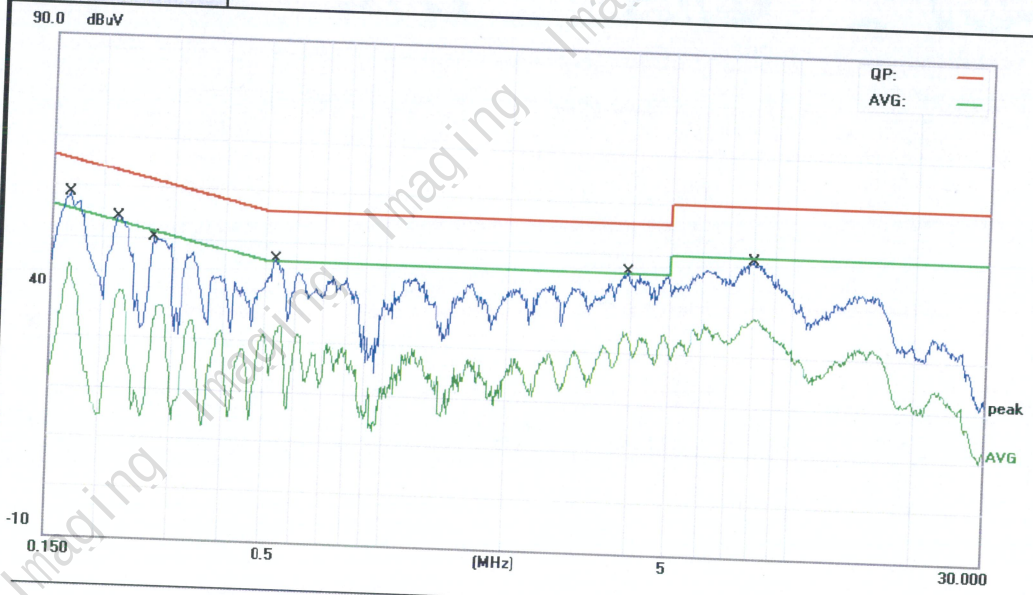

No.	Mk.	Freq.	Reading Level	Correct Factor	Measure-ment	Limit	Over	
		MHz	dBuV	dB	dBuV	dBuV	dB	Detector
1	*	0.1650	45.16	10.12	55.28	65.20	-9.92	QP
2		0.1650	34.26	10.12	44.38	55.20	-10.82	AVG
3		0.2173	40.04	10.11	50.15	62.92	-12.77	QP
4		0.2173	28.93	10.11	39.04	52.92	-13.88	AVG
5		0.2658	37.13	10.10	47.23	61.25	-14.02	QP
6		0.2658	26.40	10.10	36.50	51.25	-14.75	AVG
7		0.5378	33.20	10.02	43.22	56.00	-12.78	QP
8		0.5378	23.16	10.02	33.18	46.00	-12.82	AVG
9		3.9430	33.04	10.06	43.10	56.00	-12.90	QP
10		3.9430	24.24	10.06	34.30	46.00	-11.70	AVG
11		7.9774	35.59	10.09	45.68	60.00	-14.32	QP
12		7.9774	27.63	10.09	37.72	50.00	-12.28	AVG

Emission Level= Read Level+ Correct Factor

Attachment B--Radiated Emission Test Data

----Below 1G

Temperature:	25 ℃	**Relative Humidity:**	55%
Test Voltage:	AC 120V/60Hz		
Ant. Pol.	Horizontal		
Test Mode:	Mode 1		
Remark:			

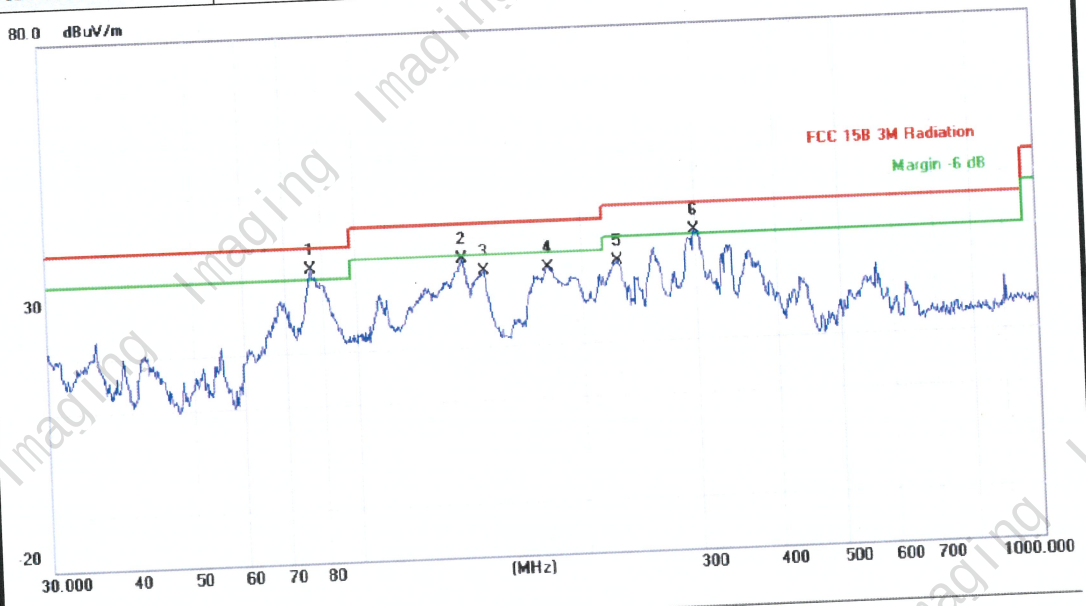

No.	Mk.	Freq.	Reading Level	Correct Factor	Measure-ment	Limit	Over	
		MHz	dBuV	dB/m	dBuV/m	dBuV/m	dB	Detector
1	*	76.5121	59.25	-23.45	35.80	40.00	-4.20	peak
2		131.2965	58.87	-22.05	36.82	43.50	-6.68	peak
3		141.8262	55.95	-21.69	34.26	43.50	-9.24	peak
4		177.5091	55.11	-20.42	34.69	43.50	-8.81	peak
5		226.0994	54.33	-18.85	35.48	46.00	-10.52	peak
6	!	298.2681	57.23	-16.69	40.54	46.00	-5.46	peak

Emission Level= Read Level+ Correct Factor

Temperature:	25 ℃	**Relative Humidity:**	55%
Test Voltage:	AC 120V/60Hz		
Ant. Pol.	Vertical		
Test Mode:	Mode 1		
Remark:			

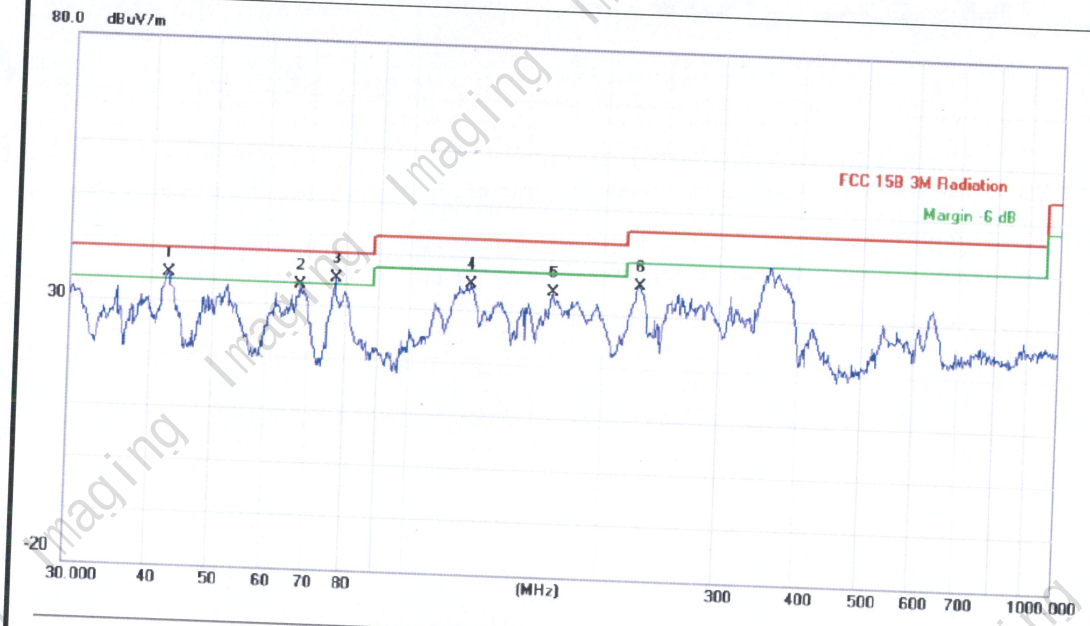

No.	Mk.	Freq.	Reading Level	Correct Factor	Measure-ment	Limit	Over	
		MHz	dBuV	dB/m	dBuV/m	dBuV/m	dB	Detector
1	*	42.4508	56.51	-21.32	35.19	40.00	-4.81	peak
2		67.6751	57.65	-23.90	33.75	40.00	-6.25	peak
3	!	76.7806	58.50	-23.45	35.05	40.00	-4.95	peak
4		123.6984	57.10	-22.32	34.78	43.50	-8.72	peak
5		166.6512	54.67	-20.70	33.97	43.50	-9.53	peak
6		226.0994	54.55	-18.85	35.70	46.00	-10.30	peak

Emission Level= Read Level+ Correct Factor

-----END OF REPORT-----