POCE
POCE Technology

Shenzhen POCE Technology Co.,Ltd.

H Building, Hongfa Science and Technology Park,
Tangtou, Shiyan, Bao'an District, Shenzhen, China

CERTIFICATE OF CONFORMITY

Certificate No.	:	POCE191112009PCS
Applicant	:	Shanghai Eastimage Equipment Co., Ltd
Address	:	NO 111,Zhiye Rd, Pudong New District, Shanghai
Manufacturer	:	Shanghai Eastimage Equipment Co., Ltd
Address	:	NO 111,Zhiye Rd, Pudong New District, Shanghai
Product	:	Walkthrough Metal Detector
Trade Name	:	Eastimage
Model(s)	:	EI-MD3000, EI-V1000, EI-V2000, EI-V3000, EI-V4000, EI-MD2000A, EI-MD3000A, EI-MD3000B, EI-MD3000C, EI-MD3000D
Test Report No.	:	POCE191112006ERS
Test Standards	:	**EN 60529:1991+A1:2000+A2:2013**

The EUT described above has been tested by us with the listed standards and found in compliance with the **IP68**.

SHENZHEN POCE TECHNOLOGY CO.,LTD. APPROVED

For Chief Executive / Jerry Yang
Date: Nov. 12, 2019

This certificate of conformity is based on a single evaluation of the submitted sample(s) of the above mentioned product. It does not imply an assessment of the whole production and other relevant directives have to be observed.

Web: http://www.poce-cert.com Tel: +86-755-29113252 E-mail: service@poce-cert.com

APPLICATION FORTEST REPORT

On Behalf of

Prepared For	:	Shanghai Eastimage Equipment Co., Ltd NO 111,Zhiye Rd, Pudong New District, Shanghai
Product Name	:	Walkthrough Metal Detector
Trade Name	:	Eastimage
Model (s)	:	EI-MD3000, EI-V1000, EI-V2000, EI-V3000, EI-V4000, EI-MD2000A, EI-MD3000A, EI-MD3000B, EI-MD3000C, EI-MD3000D
Prepared By	:	SHENZHEN POCE TECHNOLOGY CO., LTD. H Building, Hongfa Science And Technology Park, Tangtou, Shiyan, Bao'An District, Shenzhen, China
Test Date	:	Nov. 07, 2019 to Nov. 12, 2019
Date of Report	:	Nov. 12, 2019
Report No.	:	POCE191112006ERS

TEST REPORT

EN 60529

Degrees of protection provided by enclosures (IP Code)

Reference No. ..... :	POCE191112006ERS
Compiled by (+ signature)..... :	Calvin Chen / Project Engineer
Approved by (+ signature) ..... :	Machael Mo / Assistant Manager
Date of issue..... :	Nov. 12, 2019
Contents..... :	13 pages including the cover page

Testing laboratory

Name..... :	SHENZHEN POCE TECHNOLOGY CO., LTD.
Address..... :	H Building, Hongfa Science and Technology Park, Tangtou, Shiyan, Bao'an District, Shenzhen, China
Testing location ..... :	Same as above

Client

Name..... :	Shanghai Eastimage Equipment Co., Ltd
Address..... :	NO 111,Zhiye Rd, Pudong New District, Shanghai

Test specification

Standard ..... :	Compliance with EN 60529:1991+A1:2000+A2:2013
Test procedure ..... :	CE-conformity
Procedure deviation ..... :	N.A.
Non-standard test method ..... :	N.A.

Test item

Description..... :	Walkthrough Metal Detector
Trademark ..... :	Eastimage
Model and/or type reference..... :	EI-MD3000, EI-V1000, EI-V2000, EI-V3000, EI-V4000, EI-MD2000A, EI-MD3000A, EI-MD3000B, EI-MD3000C, EI-MD3000D
Manufacturer ..... :	Shanghai Eastimage Equipment Co., Ltd
Address..... :	NO 111,Zhiye Rd, Pudong New District, Shanghai
IP Code..... :	IP68 Enclosure

Particulars: test item vs. test requirements	
Operating condition	: Continuous operation
Protection against ingress of water	: IP68
Test case verdicts	
Test case does not apply to the test object	: N(N/A)
Test item does meet the requirement	: P(Pass)
Test item does not meet the requirement	: F(Fail)
Testing	
Date of receipt of test item	: Nov. 07, 2019
Date(s) of performance of test	: Nov. 07, 2019 to Nov. 12, 2019

General remarks

This test report shall not be reproduced except in full without the written approval of the testing laboratory.

The test results presented in this report relate only to the item tested.

"(see remark #)" refers to a remark appended to the report.

"(see appended table)" refers to a table appended to the report.

Throughout this report a comma is used as the decimal separator.

Remark :

- The procuct enclosure complies with the degree of protection IP68.

EN 60529			
Clause	Requirement – Test	Result - Remark	Verdict
5	**Degrees of protection against access to hazardous parts and against solid foreign objects indicated by the first characteristic numeral**		P
5.1	Protection against access to hazardous parts		P
	First characteristic numeral is 3: -Protected against access to hazardous parts with a tool, The access probe of 2,5 mmΦshall not penetrate		N
	First characteristic numeral is 4: -Protected against access to hazardous parts with a wire, The access probe of **1,0 mm** Φ shall not penetrate		N
	Dust-tight No ingress of dust	No any dust ingress	P
	Dust-protected, ingress of dust is not penetrate in a quantity to interfere with satisfactory operation of the apparatus or to impair safety	Compliance with the requirement	N
	First characteristic numeral is 6: -Protected against access to hazardous parts with a wire, The access probe of 1,0 mm Φ shall not penetrate	IP6X, No hazard parts, sealed by solid glue, compliance with the requirement.	P
5.2	Protection against access solid foreign objects		P
	First characteristic numeral is 3 : -Protected against solid foreign objects of 2,5 mm Φ and greater		N
	First characteristic numeral is 4: -Protected against solid foreign objects of 1.0 mm Φ and greater		N
	Dust-tight No ingress of dust	No any dust ingress	P
	Dust-protected, ingress of dust is not penetrate in a quantity to interfere with satisfactory operation of the apparatus or to impair safety	Compliance with the requirement	N
	First characteristic numeral is 6 : The protection against the penetration of solid foreign objects including dust	Against the penetration of solid	P
	Dust-tight No ingress of dust	No any dust ingress	P
	Dust -protected, ingress of dust is not penetrate in a quantity to interfere with satisfactory operation of the apparatus or to impair safety	Compliance with the requirement	P

EN 60529			
Clause	Requirement – Test	Result - Remark	Verdict
6	**Degrees of protection against ingress of water indicated by the second characteristic numeral**		P
	Second characteristic numeral is 3 -Protected against spraying water: Water sprayed at an angle up to 60°on either side of the vertical shall have no harmful effects		N
	Second characteristic numeral is 4 -Protected against splashing water, Water splashed against the enclosure from any direction shall have no harmful effects		N
	Second characteristic numeral is 5 -Protected against water jets: Water projected in jets against the enclosure from any direction shall have no harmful effects		N
	Second characteristic numeral is 6 -Protected against water jets: Water projected in powerful jets against the enclosure from any direction shall have no harmful effects		N
	Second characteristic numeral is7 Effect of short time immersion: -The provisions of the pressure of the water in the shell immersed in water after the specified time does not reach harmful levels		N
	Second characteristic numeral is 8 Protected against the effects of continuous immersion in water: Ingress of water in quantities causing harmful effects shall not be possible when the enclosure is continuously immersed in water under conditions which shall be agreed between manufacturer and user but which are more severe than for numeral 7		P

10	**Marking**		P
	The requirements for marking shall be specified in the relevant product standard.	IP68 marked	P
	Where appropriate, such a standard should also specify the method of marking which is to be used when:		P
	- one part of an enclosure has a different degree of protection to that of another part of the same enclosure;		P
	- the mounting position has an influence on the degree of protection;		P
	-the maximum immersion depth and time are indicated.		P

EN 60529			
Clause	Requirement – Test	Result - Remark	Verdict
11	**General requirements for tests**		P
11.1	Atmospheric conditions for water or dust Tests:		P
	-Relative humidity: 25% to 75%	70%	P
	-Temperature range: 15℃ to 35℃	At 20℃	P
	-Air pressure: 86 kPa to 106 kPa (860 mbar to 1 060 mbar).	88 kPa	P
11.2	**Test samples**		P
	The tests specified in this standard are type tests.		P
	The relevant product standard shall specify details such as:		P
	- the number of samples to be tested	Test according to IP68	P
	-conditions for mounting, assembling and positioning use of an artificial surface(ceiling, floor of wall)		P
	-the pe-conditioning, if any, which is to be used		P
	-whether to be tested energized or not		P
	-whether to be tested with its parts in motion or not.		P
11.3	Application of the general requirements and interpretation of test results		P
	The application of the general requiremets for tests and the acceptance conditions for equipment containing drain-holes or	Water device, no water come in	P
	ventilation openings is the responsiblity of the relevant technical committee		N
11.4	Combination of test conditions for the first characteristic numeral	Complied	P
11.5	Empty enclosures		N
	If the enclosure is tested without equipment inside, detailed requirements shall be indicated by the enclosure manufacturer in instructions		N
12	**Tests for protection against access to hazardous parts indicated by the first characteristic numeral**		P
12.1	Access probes		P
	Fist number is 3:The test wire of 2,5 mm Φ shall not penetrate and adequate clearance shall be kept (see tabel 6)		N
	Fist number is 4,5,6: The test wire of 1,0 mm Φ, 100mm long shall not penetrate and adequate clearance shall be kept (see tabel 6)	Test with 1N force, cannot touch live parts, No hazards,	P
12.2	Test conditions		N

EN 60529			
Clause	Requirement – Test	Result - Remark	Verdict
	For tests on low-voltage equipment, a low-voltage supply (of not less than 40 V and not more than 50 V) in series with a suitable lamp should be connectored between the probe and the hazardous parts inside the enclosure.		N
	Hazardous live parts covered only with varnish or paint, or protected by oxidation or by a similar process, are covered by a metal foil electrically connectored to those parts which are normally live in operation. The signal-circuit method should also be applied to the hazardous moving parts of high-voltage equipment. Internal moving parts may be operated slowly, where this is possible.		N
12.3	Acceptance conditions:		P
	The protection is satisfactory if adequate clearance is kept between the access probe and hazardous parts.	Satisfactory	P
12.3.1	For low-voltage equipment (rated voltage not exceeding 1000Va.c and 1500Vd.c.)		N
12.3.2	For hight-voltage equipment (rated voltage exceeding 1000Va.c and 1500Vd.c.)		N
12.3.3	For equipment with hazardous mechanical parts		N
	The access probe shall not touch hazardous mechanical parts		N
13	**Tests for protection against solid foreign objects indicated by the first characteristic numeral**		P
13.1	Test means		P
13.2	Test conditions for first characteristic numerals 1,2,3,4 Test means and the main test conditions are given in Table VII		N
13.3	Acceptance conditions for first characteristic numerals 1,2,3,4		N
	The protection is satisfactory if the full diameter of the probe specified in Table VII does not pass through any opening.		N
13.4	Dust test for first characteristic numberals 5 and 6	IP6X	P
13.4.1	The test using a dust chamber incorproating the basic principles shown in figure 2,	Complied	P
13.4.2	Eclosure are of necessity in one of two categories		N

EN 60529			
Clause	Requirement – Test	Result - Remark	Verdict
	Category 1: Where the mormal working cycle of the equipment causes reductions in air pressure within the enclosure below that of the surrounding air		N
	Category 2: where no pressure difference relative to the surrounding air is present		P
	Category 1 enclosure		N
	Category 2 enclosure		P
	Category 1 and Category 2 enclosure		N
13.5	Special conditions for first characteristic number 5		N
13.6	**Special conditions for first characteristic number 6**		P
13.6.1	Test conditions for first characteristic number 6		P
	The enclosure shall be deemed category 1, the whether reductions for atmospheric pressure are present or not	Complied	P
13.6.2	Acceptance conditions for first characteristic number 6		P
	The protection is satisfactory if no deposit of dust is observable inside the enclosure at the end of the test	Checked, No dust in inside the enclosure inner.	P
14	**Tests for protection against water indicated by the second characteristic numeral**		P
14.1	Test means & Test conditions		P
	Test means and the main test conditions are given in Table VIII		N
14.2.3	Test for second characteristic number 3 with oscillating tube or spray nozzle	IPX8	N
	The test is made using one of the two test devices described in figure 4 and in figure 5		N
	a) conditions when using the test device as in figure 4, the oscillating tube is provided with spray holes over an arc of 60° either side of the centre point, the enclosure to be tested is placed at the centre point of the semicircle. And the test duration being 5 mins		N
14.2.5	Test for second characteristic numeral 5:	IPX8	N
	The test is made by spraying the enclosure from all practicable directions with a stream of water from a standard test nozzle as shown in figure 6		N
	The conditions to be observed as follows:		N
	- internal diameter of the nozzle: 6,3mm		N

EN 60529			
Clause	Requirement – Test	Result - Remark	Verdict
	- delivery rate:12.5 l/min ± 5%		N
	- water pressure: to be adjusted to achieve the specified delivery rate;		N
	- core of the substantial stream: circle of approxi mately 40 mm diameter at 2,5m distance from nozzle		N
	- test duration per square meter of enclosure surface area likely to be sprayed: 1 mm		N
	- minmum test duration 3 min		N
	- distance from nozzle to enclosure surface: between 2.5 m and 3 m		N
14.2.6	**Test for second characteristic numeral 6:**	IPX8	N
	The test is made by spraying the enclosure from all practicable directions with a stream of water from a standard test nozzle as shown in figure 6		N
	The conditions to be observed as follows:		N
	- internal diameter of the nozzle: 12,5mm		N
	- delivery rate:12.5 l/min ± 5%		N
	- water pressure: to be adjusted to achieve the specified delivery rate		N
	- core of the substantial stream: circle of approximately 120mm diameter at 2,5m distance from nozzle		N
	- test duration per square metre of enclosure surface area likely to be spration: 3min		N
	- minimum test duration: 3min		N
	- distance from nozzle to enclosure surface: between 2,5m to 3m		N
14.2.7	Test for second characteristic numeral 7: temporary immersion between 0,15m and 1 m	IPX8	N
	The test made by completely immersing the enclosure in water		N
	a) with height less than 850 mm is located 1000 mm below the surface of the water		N
	b) the highest point of enclosure with a height equal to or greater than 850 mm is located 150 mm below the surface of the water		N
	c) the duration of the test is 30 mins	30 mins	N

EN 60529			
Clause	Requirement – Test	Result - Remark	Verdict
	d) the water termperature does not differ from that of the equipment by more than 5K		N
14.2.8	Test for second characteristic numeral 8: continuous immersion subject to agreement	IPX8	P
	The test conditions more severe than IPX7, and they shall take account of the condition that the enclosure will be continuously immersed in actual use		P
	water depth reach above 2 m from the instrument top. Lasts 12 hours	No any wate entered	P
14.3	Acceptance conditions		N
14.3.1	After testing in accordance with the appropriate requirements of 14.2.1 to 14.2.8 the enclosure shall be inspected for ingress of water.		N
14.3.2	It is the responsibility of the relevant Technical Committee to specify the amount of water which may be allowed to enter the enclosure and the details of a dielectric strength test, if any. In general, if any water has entered, it shall not:		N
	-be sufficient to interfere with the correct operation of the equipment or impair safety;		N
	- deposit on insulation parts where it could lead to tracking along the creepage distances;		N
	- reach live parts or windings not designed to operate when wet;		N
	- accumulate near the cable end or enter the cable if any.		N
14.3.3	If the enclosure is provided with drain-holes, it should be proved by inspection that any water which enters does not accumulate and that it drains away without doing any harm to the equipment. For enclosures without drain-holes, the relevant product standard shall specify the acceptance conditions if water can accumulate to reach live parts.		N

15	**Tests for protection against access to hazardous parts indicated by the additional letter**	No such letter	N
15.1	Access probes		N
15.2	Test conditions		N
15.3	Acceptance conditions		N

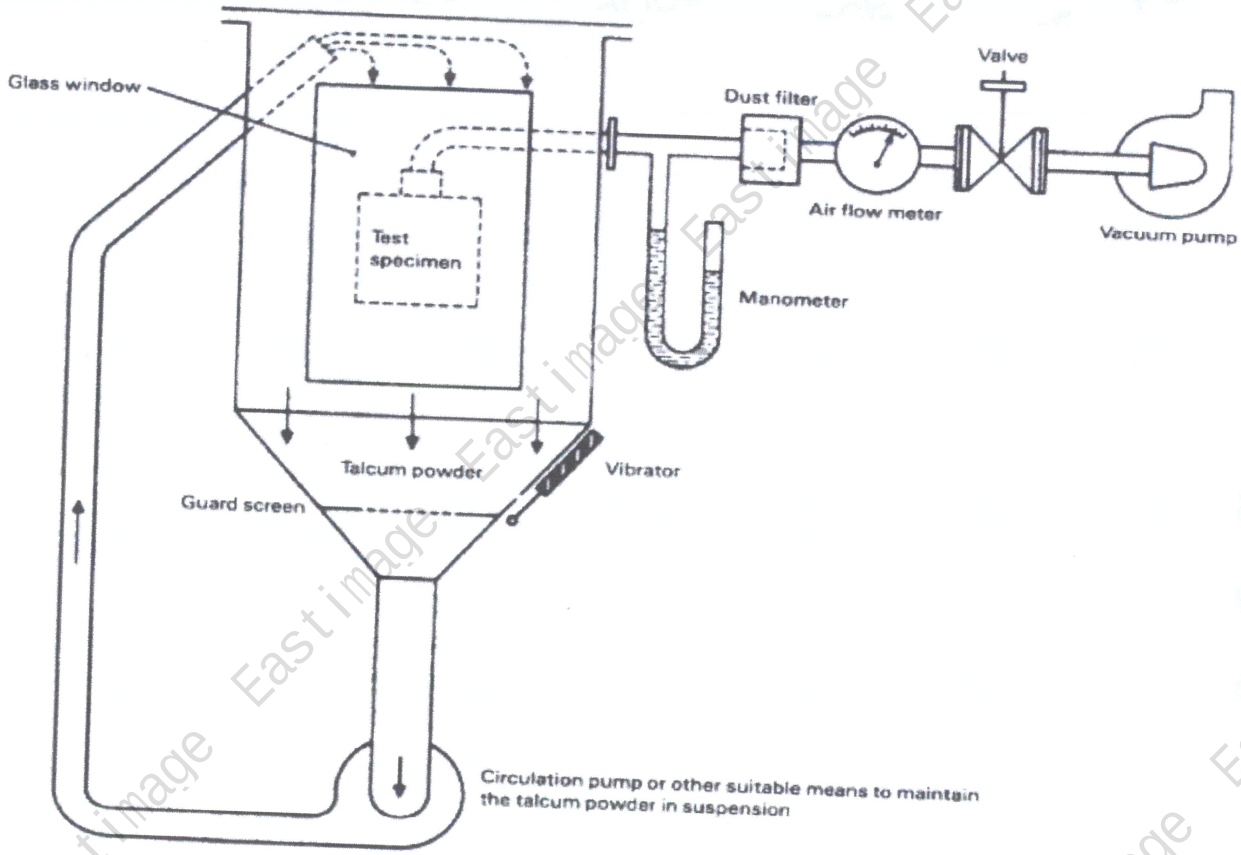

NOTE See IEC 60068-2-68, figure 2 valid for La2 only.

Figure 2 – Test device to verify protection against dust (dust chamber)

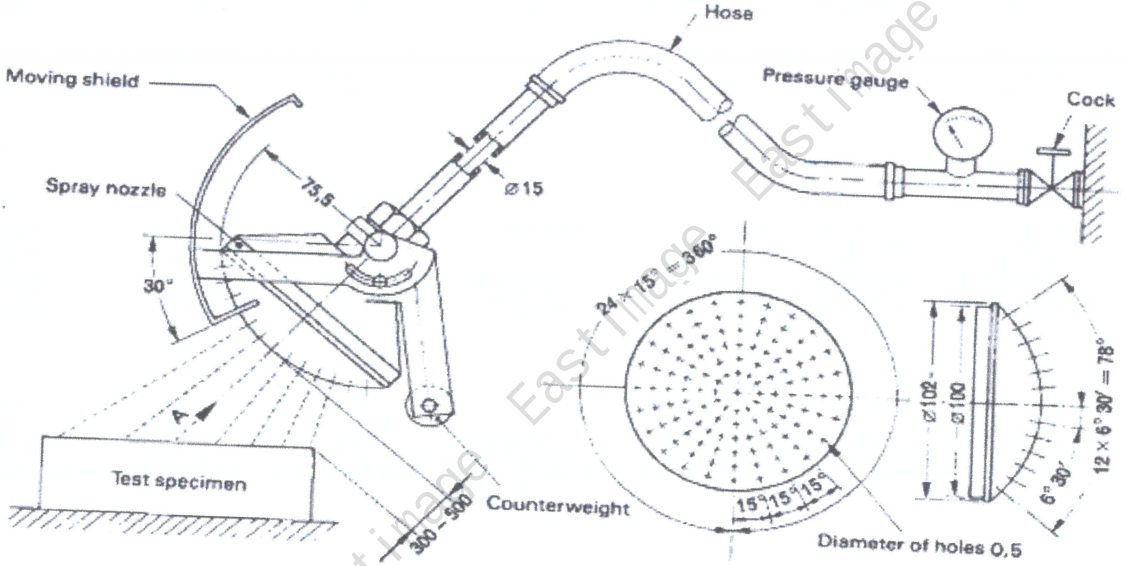

IEC 283/01

Dimensions in millimetres

121 holes of Ø 0,5:
1 hole at the centre
1 inner circles of 12 holes at 30° pitch
4 outer circles of 24 holes at 15° pitch
Moving shield – Aluminium
Spray nozzle – Brass

Figure 5 – Hand-held device to verify protection against spraying and splashing water; second characteristic numerals 3 and 4 (spray nozzle)

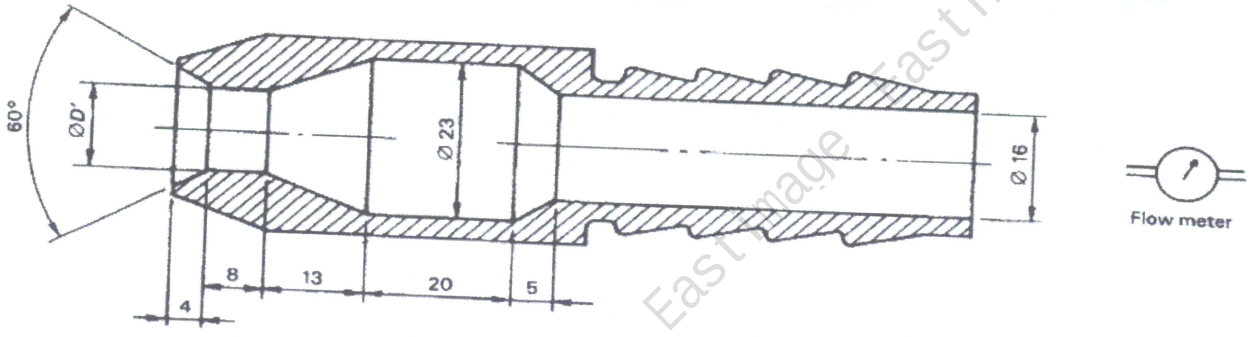

IEC 284/01

Dimensions in millimetres

D' = 6,3 for the test of 14.2.5 (second characteristic numeral 5)
D' = 12,5 for the test of 14.2.6 (second characteristic numeral 6)

Figure 6 – Test device to verify protection against water jets (hose nozzle)

Test photos of EUT:



Fig. 1

*** End of the report ***